Global Precipitation Measurement

System Requirements Review

Core Spacecraft Functional Element

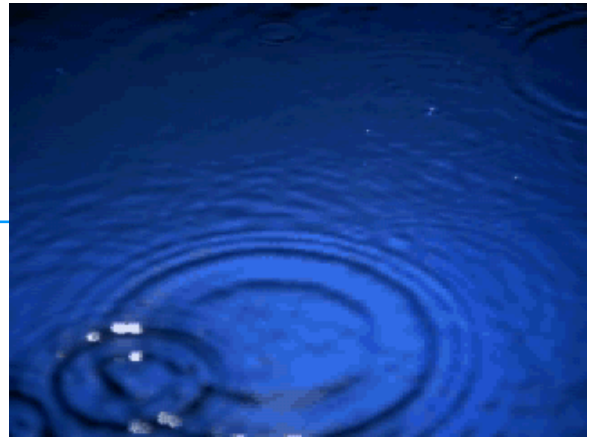

Ken Yienger 301/286-3350
kyienger@pop400.gsfc.nasa.gov
Goddard Space Flight Center

June 4 - 5, 2002

Briefing Overview

- ***Summary of Level 1 and Level 2 Requirements***
  - *NASDA H-IIA Launch Vehicle Accommodations*
  - *Instrument Suite Accommodations*
- ***Core Spacecraft Baseline Concept Study Results***
  - *Mission Orbit Selection and Impacted System Design Parameters*
  - *Spacecraft Architecture Concepts and Final Trade Space Matrix*
- ***Baseline Core Spacecraft Architecture***
  - *Baseline Mechanical Layout and Subsystem Descriptions*
  - *System Design Budgets (Mass Properties, Power, Data Rate)*
  - *Technical Risk Areas*
- ***Post SRR Activities***
  - *Upcoming Subsystem and System Level Trades (Pre-SCR, PDR)*
- ***Challenges***

Primary Spacecraft Level 2 Introduction

Level 1 Requirements

Mission:	Instrument:
* Measurement * Validation * Products * Duration	* Space Based * Ground Based
* Launch *Operations *Science Data System *Science Products * Descope * Public Outreach	

Level 2 Requirements

Science:	Mission:
* Storm Types * Precip Types * Measurements * Coverage * Frequency & Accuracy	* Data Handling * Payloads * Constellation Design * Calibration & Verification * Outreach
* Launch Services	* Process Requirements
Space Segment: * Instruments - DPR - GMI - Opportunity * Primary Spacecraft - Performance - Accommodation * Constellation Spacecraft - Performance - Accommodation	**Ground Segment:** * NASA Mission Operations - S/C Flight Ops - Space/ Ground Coordination * Ground Validation & Calibration - Super Site - Regional Rain Gauge Network * Precipitation Processing System - Product Development - Data Distribution

Other Sources

* Formulation Study Results
* Science Workshops
* GSFC Guidelines

- *Initial Operational Capability*
- *Mission Lifetime*
- *Instrument Suite Accommodation*
- *Mission Orbit /Launch Vehicle*
- *EOL Disposal*

Level 1 Driving Requirements

- ***[2.2.1] Primary Spacecraft IOC***
  - *[November] 2007*
- ***[3.1.4.1] Spacecraft Lifetime***
  - *3 years with consumables for 5 years*
- ***[3.2.1.1.2] Instrument Accommodation Requirements***
  - *Accommodate the following suite:*
    - *Dual Precipitation Radar (DPR) – provided by NASDA*
    - *Multi-channel, polarized, Conical Scan, Passive Microwave Radiometer*
  - *Growth Capability of at least 10% in technical resources (Mass, Power, Data Rate)*
    - *Capability to allow for Instrument-of-Opportunity (IOO)*
- ***[3.3.1] Launch Vehicle***
  - *NASDA provided H2A-202*
  - *Mission Orbit Selected to Minimize time to cover earth between 65° latitudes*
- ***[3.6] EOL Re-entry Requirements***
  - *Comply with Debris Guidelines NPD8170.3, NSS 1740.14*

Primary Spacecraft Level 2 Requirements

- ***[5.3.1] Lifetime – 3 years with 5 year goal***
  - *Satisfies L1R*
- ***[5.3.2,-3,-4] Probability of Returning Instrument Data – DPR, GMI***
  - *Provides a means to evaluate reliability design decisions*
- ***[5.3.6,-7] Geo-location of Measurements – DPR, GMI***
  - *Needed to relate measurements to models and co-observations*
- ***[5.3.8,-9] Orbits – Launch, Operational, Autonomous Maintenance***
  - *Defines orbits to satisfy coverage and mission life*
- ***[5.3.10] Launch Vehicle Capability***
  - *Defines mass to orbit*
- ***[5.3.14] Instrument Accommodation***
  - *Defines technical resources needed by the payload*
- ***[5.3.5,-6,-7,-12] Attitude Control & Knowledge***
  - *Needed to support geo-location and co-observations*
- ***[5.3.15] Communications***
  - *Defines uplink, downlink, data allocations*
- ***[5.3.11] Use GPS***
  - *DPR needs to calculate range bins, thus reducing the data rate*

Level 2 System Driving Requirements

- ***Space Segment***
  - *[5.3.8] Operational Orbit:* *400 ± 5 km at 65° ± TBD, Frozen*
  - *[5.3.9] Insertion Orbit:* *400 km x 650 km at 65° ± TBD*
  - *[5.3.10]* ***Launch Mass:*** ***3200 kg***
  - *[7.1] Launch Environment:* *H2A User's Guide, H2A/GPM ICS*
- ***Instrument Requirements***
  - *[5.3.14.1] Support DPR, GMI, and Instrument of Opportunity (IOO):* ***1015 kg***
  - *[5.3.14.2] Instrument Orientation and FOV: Respective Instrument ICD's*
  - *[5.3.14.3] Power Interface: Unregulated Power Service +28 ± 6 Vdc*
  - *[ICD] Thermal Isolation from Spacecraft Bus: < 8 Watts Conductive*
  - *Instrument Data Requirements:*
    - *[ICD] Command, Science, and Housekeeping data service via 1553 data bus*
    - *[5.3.15.8] Science and Housekeeping Data File Size: one minute per file per instrument*
    - *[5.3.15.9] Instrument Housekeeping delivered separate from science data*
    - *[5.3.15.10] Geo-location Information: Each Science Data file shall contain*
      - *Spacecraft time, location in ECEF format, latitude, longitude, and altitude*

Subsystem Driving Requirements

- ***GN&C Subsystem***
  - *Attitude Control and Knowledge (Nominal Science Mode):*
    - *[5.3.5] Pointing: Instrument Nadir Axis within 5 km of nadir*
      - *Instrument Nadir axis: ± 0.2° (3σ) of nadir*
      - *Crosstrack axis: ± 0.2° (3σ) of orbit normal*
    - *[5.3.6-7] Geo-location: Determine IFOV of GMI and DPR within 1 km*
      - *Attitude Knowledge: ± 0.1° (3σ) per axis*
    - *[5.3.12] Jitter/Stability: 0.07 °/sec (3σ) RMS*
  - *[5.3.11] GPS Receiver for Orbit Position and Time Determination*
  - *[5.3.13] Autonomous Orbit Maintenance*
  - *[Level 3] Autonomous Safe Hold Attitude*
    - *Safe Hold Attitude Selection based on stable thermal environment for instruments, power positive condition for spacecraft, and minimal aerodynamic drag*
- ***Propulsion***
  - *[Level 3] Lifetime Definition (Design Reference Missions)*
    - *Delta V Requirements for altitude maintenance shall envelope greater of*

      A) Three Year +2σ or B) Five Year Mean

      Schatten Solar Flux predictions for frozen orbit at mission altitude

Subsystem Driving Requirements (con't)

- ***Command and Data Handling***
  - *[5.3.14.5-8] Instrument Data Rates: Science and housekeeping up to 230 kbps*
  - *[5.3.15.11] Data Storage: NLT 12 hours data storage for science and housekeeping data*
    - *Retransmission of stored data without loss of current data*
- ***Flight Software***
  - *[4.3] Independent Verification and Validation of Software: per NPD 8730.4*
- ***Communications***
  - *[4.2] Use of Internet Protocols – Space to Ground Segment*
  - *[4.4], [5.3.15.1-6] Primary Spacecraft Data Links (See Table Below)*
  - *[5.3.15.5] Science Downlink Bit-Error rate (BER): $< 10^{-8}$ (99% of the time)*

Link	Antenna (Minimum Margin)	Data Rate	Use
MA	HGA (2 db to TDRSS)	Fwd: 2 kbps Rtn: 300 kbps	Normal Operations
SSA	HGA (2 db to TDRSS)	Fwd: 16 kbps Rtn: 1.4 Mbps	Data Recovery
	Omni (6 db GN)	Fwd: 500 bps Rtn: 2 kbps	Contingency
GN	Omni (6 db GN)	Fwd: 2 kbps Rtn: 4 Mbps	Contingency

Launch Vehicle Interface

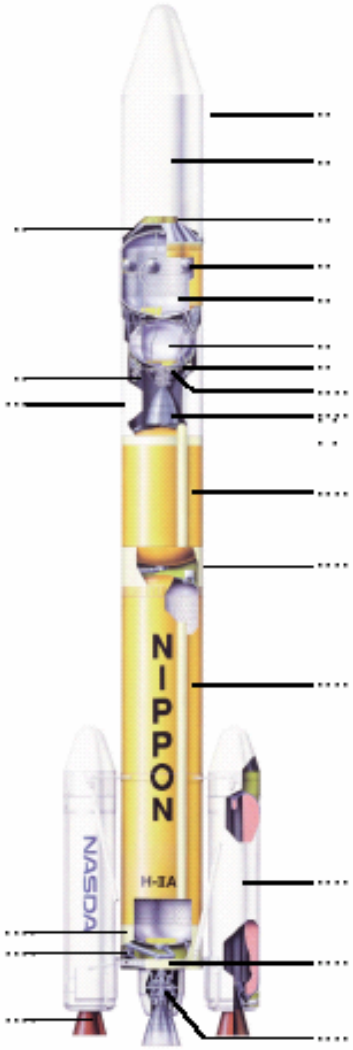

1. Payload fairing
2. Spacecraft
3. Payload adapter
4. Payload support structure
5. Cryogenic He bottles
6. Second stage LH_2 tank
7. Second stage LOX tank
8. Avionics Equipment panel
9. Reaction control system
10. Ambient He bottles
11. Second stage engine (LE-5B engine)
12. Interstage section
13. First stage LOX tank
14. Center body section
15. First stage LH_2 tank
16. Solid rocket booster (SRB-A)
17. First stage engine section
18. Auxiliary engine
19. Ambient He bottles
20. First stage engine (LE-7A engine)
21. SRB-A movable nozzle

Figure 1.2.2 H-IIA (H2A202) launch vehicle configuration

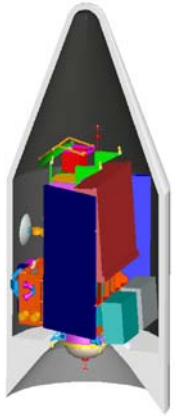

- ***Design Loads and Environments taken from H-2A User's Manual (December 2001)***
  - *Fairing: Ø 4m, Ø 3.7m static envelope*
  - *Dual Launch. GPM Core top payload*
  - *Mechanical interface requirements*
    - *Launch Moment: 5500 kg-m*
    - *Radial CG Offset: < 50 mm*
    - *Frequency: Lateral > 10 Hz., Axial >30 Hz.*
  - *Payload Attach Fitting Ø 1194 mm*
- ***Launch Mass Allocation***
  - *400x650 @65°: 3200 kg*

DPR Instrument Accommodations

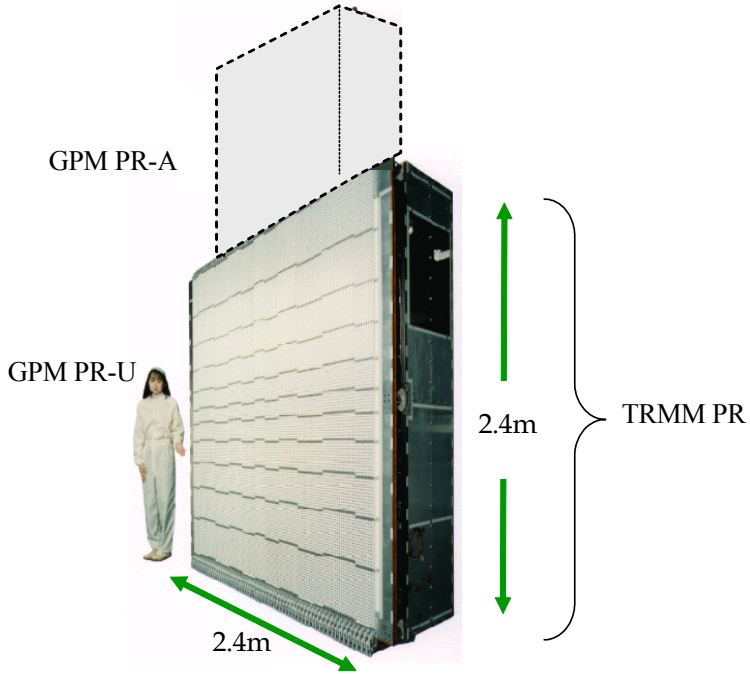

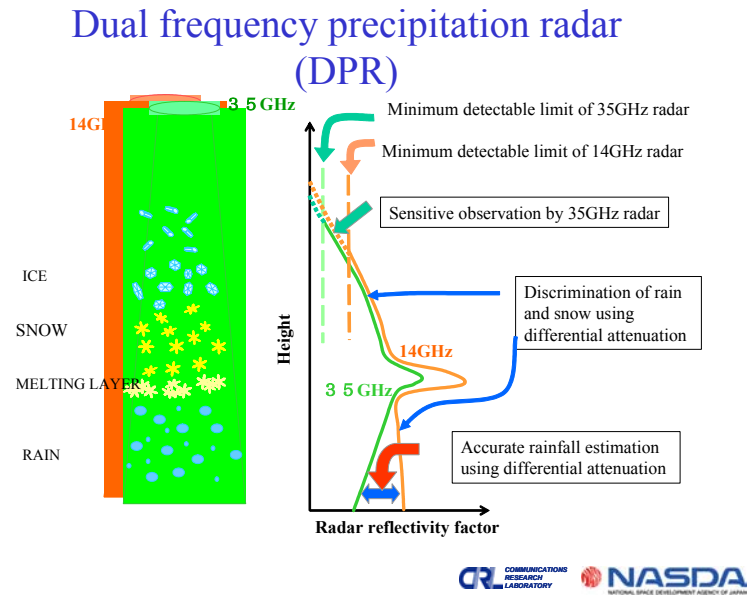

PR-U (Ku Band Radar)

- *[5.1.1.10.1] Mass: 370 kg*
- *[5.1.1.10.2] Power: 320 W*
- *[5.1.1.10.3] Volume: 2.4m x 2.4m x 0.5m*
- *[5.1.1.10.4, 5.3.14.6] Data: 95 kbps*
- *[5.1.14.2] Instrument FOV*
  - *Assumed FOV Req'ts of TRMM PR*

PR-A (Ka Band Radar)

- *[5.1.1.9.1] Mass: 290 kg*
- *[5.1.1.9.2] Power: 250 W*
- *[5.1.1.9.3] Volume: 1.0m x 1.0m x 0.5m*
- *[5.1.1.9.4, 5.3.14.6] Data: 95 kbps*
- *[5.1.14.2] Instrument FOV*
  - *Assumed FOV Req'ts of TRMM PR*

GPM Microwave Imager/Instrument of Opportunity

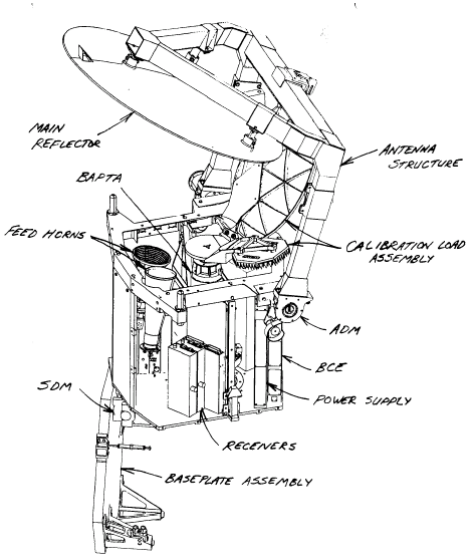

- ***GPM Microwave Imager (GMI)***
  - *[5.1.2.3] Mass: 70kg*
  - *[5.1.2.4] Power: 81 W*
  - *[5.1.2.6, 5.3.14.7] Data rate: 15 kbps*
  - *[5.1.14.2] Instrument FOV*
    - *Assumed FOV Requirements of TMI*
  - *Spacecraft Impacts*
    - *Impacts Forward Thruster Placement*
    - *Uncompensated Momentum*

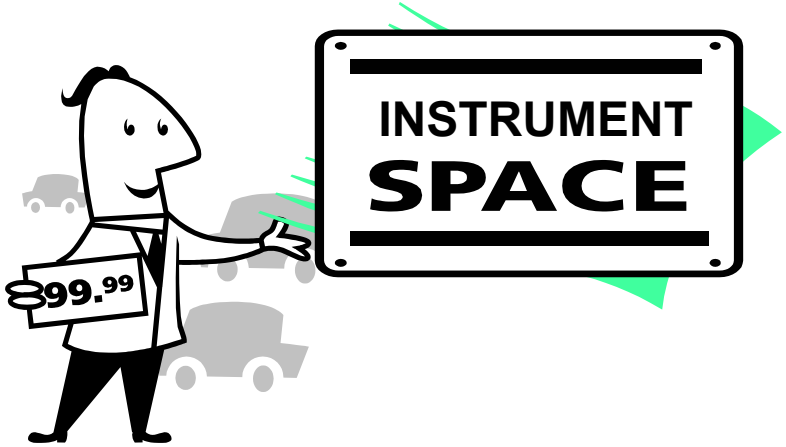

- ***Instrument of Opportunity (IOO)***
  - *Mass: 80 kg*
  - *Power: 100W*
  - *[5.1.14.8] Data rate: 25 kbps*
  - *Instrument FOV*
    - *Nadir Pointing Instrument Assumed*
    - *Cold Side Radiator Not Accommodated*

Mission Orbit Design Drivers

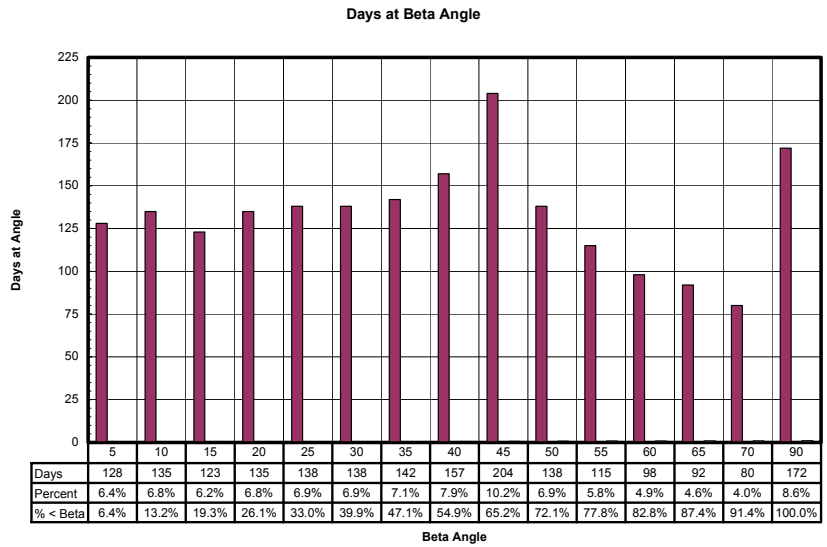

	5	10	15	20	25	30	35	40	45	50	55	60	65	70	90
Days	128	135	123	135	138	138	142	157	204	138	115	98	92	80	172
Percent	6.4%	6.8%	6.2%	6.8%	6.9%	6.9%	7.1%	7.9%	10.2%	6.9%	5.8%	4.9%	4.6%	4.0%	8.6%
% < Beta	6.4%	13.2%	19.3%	26.1%	33.0%	39.9%	47.1%	54.9%	65.2%	72.1%	77.8%	82.8%	87.4%	91.4%	100.0%

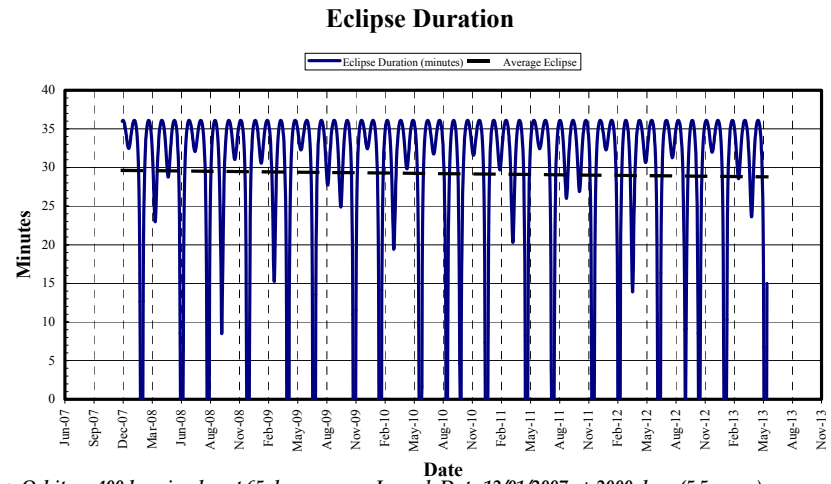

- *Orbit 400 km circular at 65 degrees* — *Launch Date 12/01/2007 + 2000 days (5.5 years)*
- *Mean Eclipse 29.20 Minutes* — *Days Above Mean (%) 1489 (74.6%)*
- *Maximum Eclipse 36.11 Minutes* — *Days No Eclipse (%) 170 (8.5%)*

- ***Mission Orbit Design Drivers (5 Years at 400 km circular 65°)***
  - *Predicted Solar Flux Levels Peak in 2011 Causing Higher Orbit Drag (GPM Flying Hump)*
    - *Higher Drag means More Mission Fuel to Maintain Orbit*
  - *Solar Angles Vary $0° \leq \beta \leq 90°$*
    - *Cause Periodic Yaw Maneuvers to Maintain Cold Space View*
    - *Cause Solar Arrays to be Sized Larger for Extreme Cant Angles*
  - *Eclipse Durations Average Over 30 minutes per Orbit for ~75% of Mission Lifetime*

- ***Trade Study Balances Mission Life Requirements, Power Needs, Launch Mass***

Solar Array Trade Study Candidates

Fixed Array, Honeycomb Structure

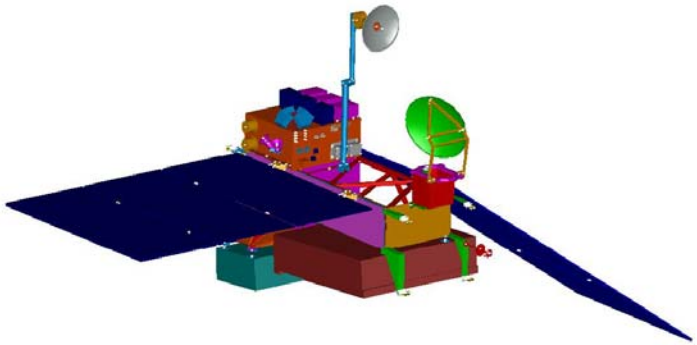

Baseline Configuration

Dual Articulating Arrays

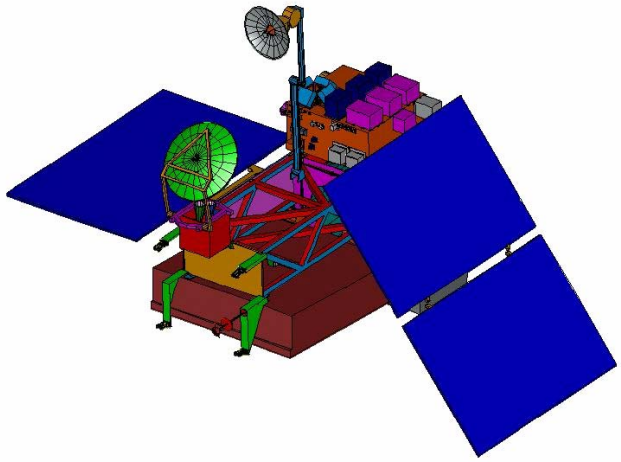

Fixed Array, Ultra-Flex Structure

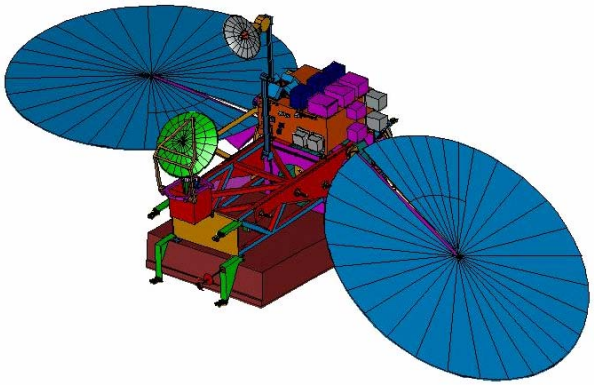

Fixed Plus Articulating Array

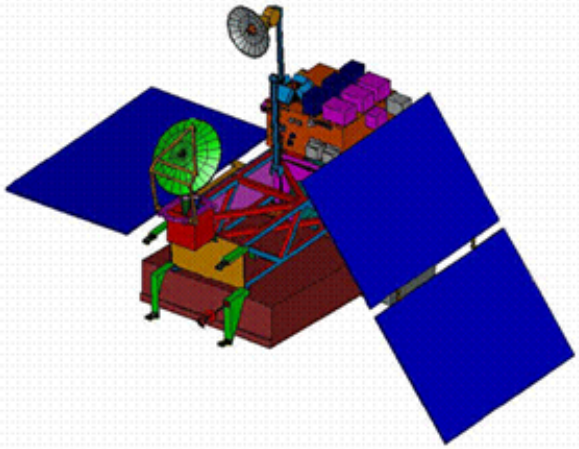

Solar Array Trade Study

Mission Mass (kg)	Dual Articulating Arrays Allocation (kg)	Dual Articulating Arrays Estimate (kg)	Fixed Array - Baseline Allocation (kg)	Fixed Array - Baseline Estimate (kg)
Payload Total	**1015**	**812**	**1015**	**812**
Structure	636	578	660	600
Power	455	364	572	458
Propulsion (Dry)	171	137	136	109
Propulsion (Pressurant+Unusable)	35	28	31	25
Bus Total	**2864**	**2382**	**2967**	**2468**
Drag Area (Orbit Average)	**13.300**	**13.300**	**7.000**	**7.000**
Trade Study Case	**5 yr Mean 1/09**	**5 yr Mean 1/09**	**5 yr Mean 1/09**	**5 yr Mean 1/09**
Propellant (Delta V)	572	566	334	322
Propellant Margin	114	113	67	64
Total Propellant Load	**706**	**694**	**413**	**396**
BOL Mass (Launch)	**3551**	**3061**	**3368**	**2854**
(Reserve Launch Mass)	-351	139	-168	346
Launch Mass	**3200**	**3200**	**3200**	**3200**

Mission Mass (kg)	Fixed Array - Ultraflex and Lithium Ion Battery Allocation (kg)	Fixed Array - Ultraflex and Lithium Ion Battery Estimate (kg)	Fixed + Articulating Array Allocation (kg)	Fixed + Articulating Array Estimate (kg)
Payload Total	**1015**	**812**	**1015**	**812**
Structure	561	510	682	620
Power	255	204	600	480
Propulsion (Dry)	136	109	171	137
Propulsion (Pressurant+Unusable)	31	25	35	28
Bus Total	**2528**	**2103**	**3070**	**2553**
Drag Area (Orbit Average)	**8.100**	**8.100**	**10.800**	**10.800**
Trade Study Case	**5 yr Mean 1/09**	**5 yr Mean 1/09**	**5 yr Mean 1/09**	**5 yr Mean 1/09**
Propellant (Delta V)	365	356	478	468
Propellant Margin	73	71	96	94
Total Propellant Load	**451**	**437**	**592**	**576**
BOL Mass (Launch)	**2966**	**2530**	**3643**	**3114**
(Reserve Launch Mass)	234	670	-443	86
Launch Mass	**3200**	**3200**	**3200**	**3200**

Solar Array Power Generation

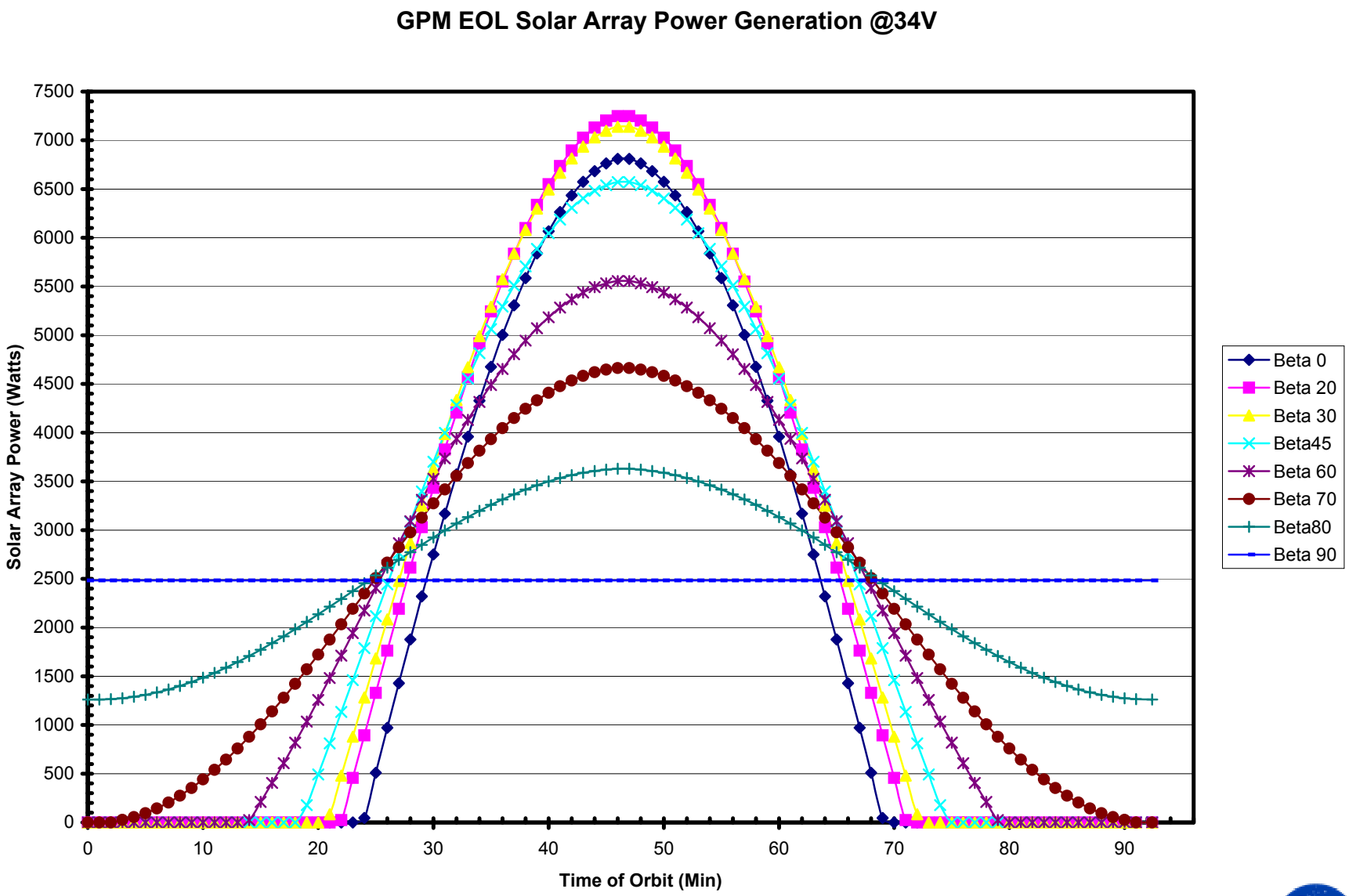

Spacecraft Baseline Concept Configuration

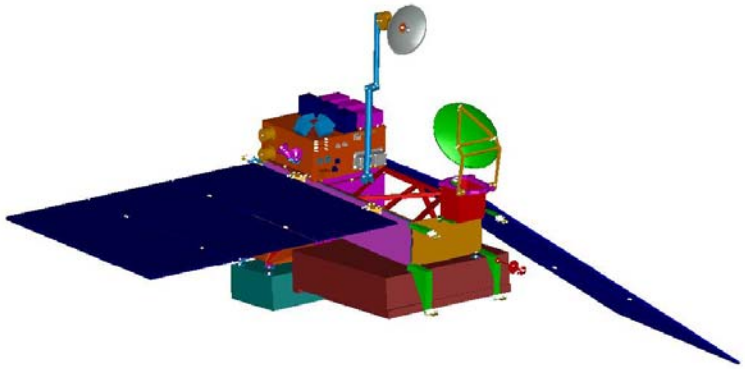

GPM EXPLODED VIEW

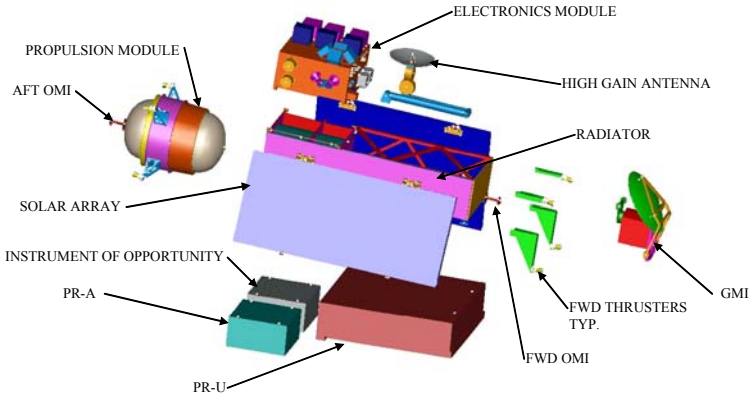

PROPULSION MODULE

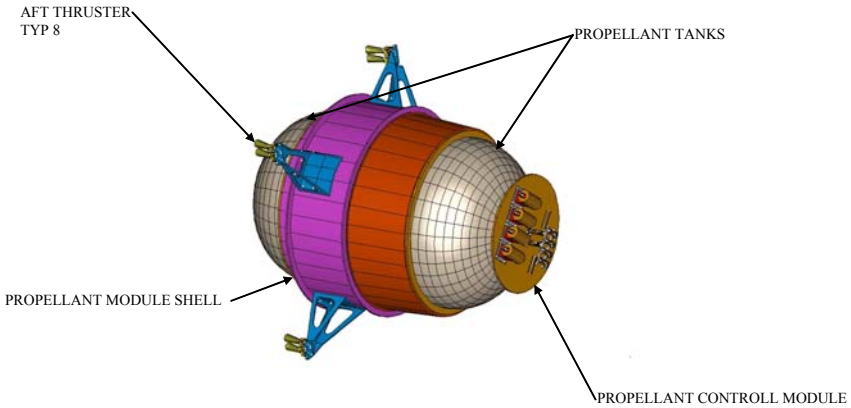

ELECTRONICS MODULE

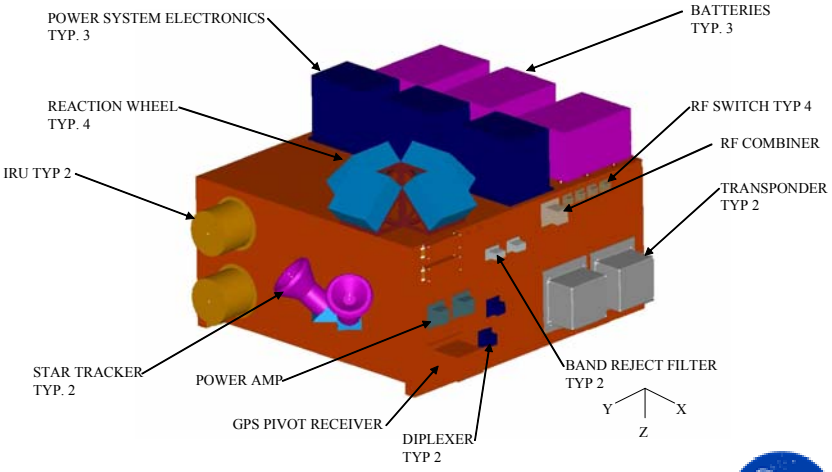

Tale of the Tape (TRMM vs. GPM)

Mass Breakdown	TRMM Weight (kg)	GPM Weight (kg)	Ratio
Payload			
PR-U	464.9	462.5	99%
PR-A	0.0	362.5	n/a
GMI	54.1	87.5	162%
Instrument of Opportunity	0.0	102.5	n/a
VIRS	52.1	0.0	0%
LIS	20.4	0.0	0%
CERES	46.6	0.0	0%
Payload Total	**638.1**	**1015.0**	159%
Spacecraft Bus Subsystems			
ACS	144.4	102.5	71%
C&DH	81.7	31.8	39%
Power	373.6	572.1	153%
Thermal	118.7	107.5	91%
RF Communications	29.5	34.5	117%
HGADS	83.0	75.0	90%
Propulsion (Dry Mass)	141.0	136.3	97%
Electrical	274.2	201.2	73%
Structure	735.9	660.1	90%
Bus Subsystems Total	**1982.0**	**1920.9**	97%
Dry Weight Total	**2620.1**	**2935.9**	112%
Propellant	**903.8**	**432.0**	48%
Launch Mass	**3523.9**	**3367.9**	96%

Mass Fractions	TRMM	GPM
Launch Mass (kg)	3524	3368
Orbital Avg. Power (W)	1018	1507
Payload	18.1%	30.1%
Bus	56.4%	57.0%
Dry Weight	74.5%	87.2%
Propellant	25.3%	12.6%
Launch Margin	2.7%	-5.2%

- ***GPM Solar Arrays are Fixed with 31 m2 total area (1500 W load)***
- ***TRMM Solar Array are Dual Articulating with 18m2 total area (1018 W load)***

Mass and Power Budgets

	GPM Weight (kg)
Payload	
PR-U	370.0
PR-A	290.0
GMI	70.0
Instrument of Opportunity	82.0
Payload Total	**812.0**
Margin	**203.0**
Payload Allocation	**1015.0**
Spacecraft Bus Subsystems	
ACS	82.0
C&DH	25.4
Power	457.7
Thermal	86.0
RF Communications	27.6
HGADS	60.0
Propulsion (Dry Mass)	109.0
Electrical	182.9
Structure	600.1
Bus Subsystems Total	**1630.7**
Margin	**290.2**
Bus Subsystem Allocation	**1920.9**
Dry Weight Total	**2442.7**
Margin	**493.2**
Dry Weight Allocation	**2935.9**
Propellant Load (DV+Residuals)	**365.2**
Propellant Margin (20%)	**66.8**
Total Propellant Load	**432.0**
Launch Mass	**3367.9**
Launch Allocation	**3200.0**
Margin	**-5.25%**

Mission Power (W)	GPM Power (W)
Payload	
PR-U	320
PR-A	250
GMI	81
Instrument of Opportunity	100
Payload Estimate	**751**
Margin	188
Payload Allocation	**939**
ACS	148
C&DH	72
Power electronics	75
Thermal	62
Propulsion	52
Spacecraft	10
RF Comm	72
Mechanisms	25
Electrical (Harness)	0
Bus Estimate	**454**
Margin	114
Bus Allocation	**568**
Spacecraft Estimate	1205
Margin	301
Spacecraft Allocation	**1507**

Mass Reduction Options

Reduction Scheme	Baseline (25% Margin)	Baseline (15% Margin)	Drop IOO (25% Margin)	UltraFlex Solar Array (25% Margin)	Lithium Ion Battery (25% Margin)	UltraFlex Lithium Ion (25% Margin)
Payload	812	812	730	812	812	812
Bus	1631	1631	1587	1422	1455	1260
Propellant	432	432	412	501	407	469
Margin	493	327	475	451	481	425
Launch Mass	**3368**	**3202**	**3204**	**3186**	**3155**	**2966**

- ***Use Baseline Design with Reduced Mass Margins***
  - *15% Mass Margin on Payload and Bus Subsystems (10% on Structure/Harness)*
- ***Drop Instrument of Opportunity (IOO) Capability***
- ***Utilize Technology Alternatives***
  - *Lithium Ion Batteries*
  - *Ultra-Flex Solar Array*

Propulsion Baseline Concept

- ***Blowdown Monopropellant Hydrazine***
  - *1 lbf Dual Seat Thrusters*
    - *Sizing for Optimal Station-keeping Maneuvers*
  - *Fore and Aft Thrust Capability*
  - *2 "TDRS Class" Propellant Tanks*
    - *"Design for Demise" Re-qualification*
    - *Elastomeric Diaphragm PMD*

- ***EWR 127.1 Safety/Design Compliance***
  - *Dual Fault Tolerant for Personnel Hazards*
  - *Single Fault Tolerant for Mission Success*
  - *Comply with Applicable NASDA Guidelines*

- ***"Design For Demise" Philosophy***
  - *Not Designing for De-Orbit Contingency*
    - *Propellant not Budgeted (~ 200 kg savings)*
    - *Thruster Size Not Compatible for Terminal Burn*
  - *Aluminum or Composite Tanks*

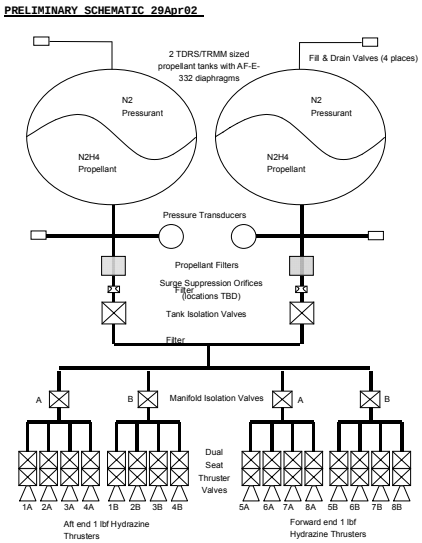

PROPULSION MODULE

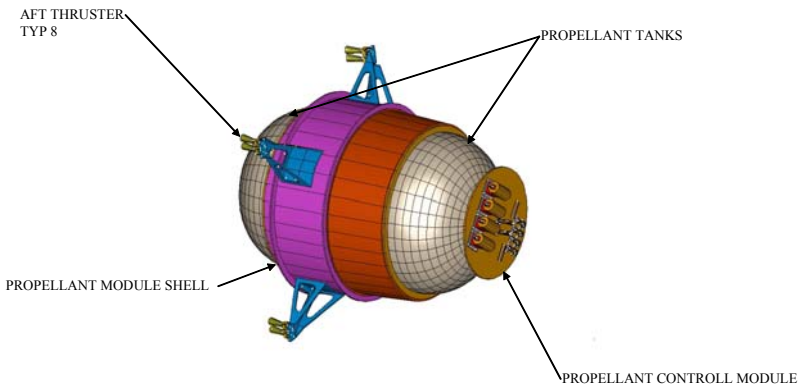

GNC Baseline Concept

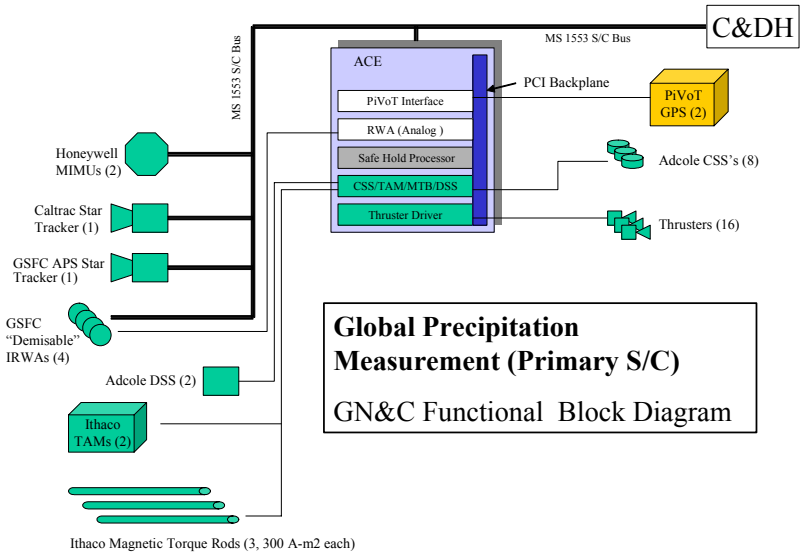

- ***Maintain Attitude Control during Maneuvers***
  - *Null Tip-Off Rates and Achieve Mission Attitude*
  - *Orbit Lowering to Mission Altitude*
  - *Yaw slew approximately 12 times/year*
    - *Slew 180 degrees within TBR minutes*
  - *Mission Altitude Maintenance*
- ***Maintain pointing accuracy in science mode***
  - *Accuracy = +0.2° (R/P/Y) (3σ)*
  - *Knowledge = +0.1 ° (R/P/Y) (3σ)*
  - *Jitter = 0.07 ° peak to peak, 3σ (TBR Duration)*
- ***Independent Safe Hold Mode***
  - *Digital implementation: Software-based safe hold mode residing on a separate ACS processor (not main C&DH processor, which contains software for other control modes)*
- ***Autonomous Orbit Maintenance***
  - *Orbit Maintenance maneuvers calculated, planned and executed onboard the spacecraft without the need for ground intervention*
  - *Goal – Perform Orbit Maintenance In Science Mode (Valid Science Data during Maneuvers)*

Power System Baseline Concept

- ***3 Upgraded MAP PSE units***
  - *Maximize use of heritage hardware*
  - *Upgraded for GPM Power Loads*
  - *Circuit breakers, Soft start of loads*
  - *Single String Power Bus*

- ***3 Nickel Hydrogen Batteries***
  - *150 AH Battery Capacity*
    - *Individual battery charge control*
  - *Investigating Lithium Ion*
    - *Potential Dry Mass Savings ~ 100 kg*
    - *LEO Cycling Demonstration*

- ***Solar Arrays***
  - *31 m² Fixed Solar Wings*
    - *Provide 3100WH/Orbit*
    - *Generate 7650W EOL Peak*

GPM Power System

- 3 Independent Power System units
- Total SA Power = 7500 Watts (2500 W/unit)
- Each unit provides power to diff. Loads (500W/unit)

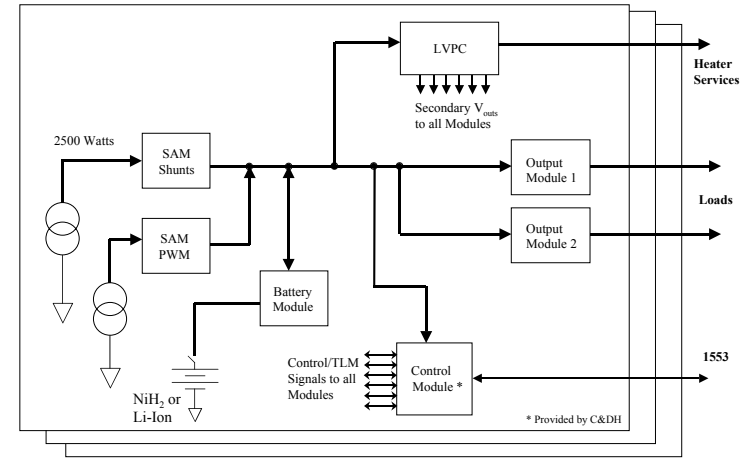

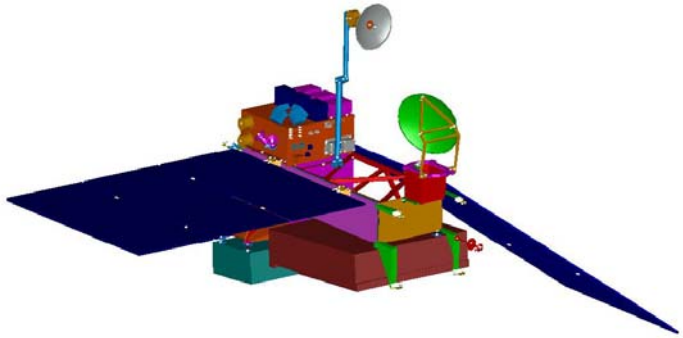

Ultra-Flex Solar Arrays

The *UltraFlex* Solar Array

- *Mission-Enabling Technology for Mass and Stowage Critical Applications*
  - *Ultra-Lightweight & Extremely Low Stowage Volume*
    - 1/4 to 1/3 the weight of standard arrays
      - *over 180 W/kg BOL with 27% TJ solar cells!*
    - <1/4 the stowed volume of standard arrays
  - *Allows spacecraft to maximize payload or reduce launch costs*
  - *Routinely evaluated as the most mass efficient, lowest risk, array solution for interplanetary missions*

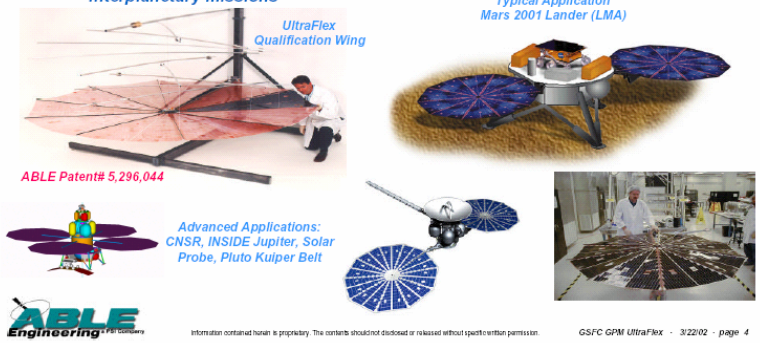

Deployed UltraFlex Wing System

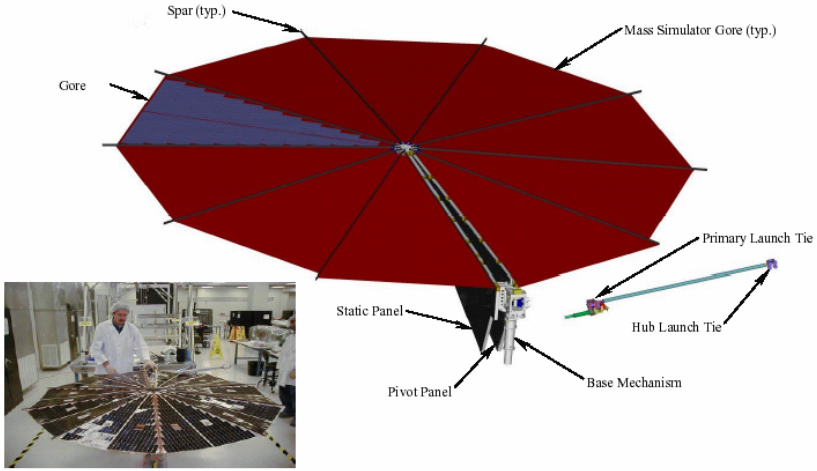

- GPM UltraFlex Wing System Design Overview:
  - S/C Array Configuration: One UltraFlex Wing
  - Wing radius: 2.34 m (92.3 in.)
    - Stowed volume approx. 9000 in^3; stowed stack height approx. 5"
  - 20 cells/string, 12.5 strings/gore, 250 strings total
    - 3.96 cm x 6.89 cm, 5.5-mil-thick, standard SPL 26.5% TJ solar cell with integrated by-pass diode
    - 4-mil-thick coverslide
    - Active cell area of UltraFlex wing = 13.64 m^2
  - Aphelion Solstice power @ 35.78 Vmp = 3594 W (includes all standard loss factors)
  - Wing system weight: 25.6 kg (does not include standoff yoke structure, mass will increase slightly if yoke is required)
  - Approximate EOL specific power: 140 W/kg

- ***Developed by Able Engineering***
  - *MARS-01 Lander, Solar Probe*
- ***Dramatic Mission Mass Savings***
  - *175 kg of Dry Mass Reduction*
  - *Offset Slightly by Increased Drag Area*
    - *Total Savings ~ 100 kg Launch Mass*

C&DH Baseline Concept

Command and Data Handling Block Diagram

Identical Redundant Unit Not Shown

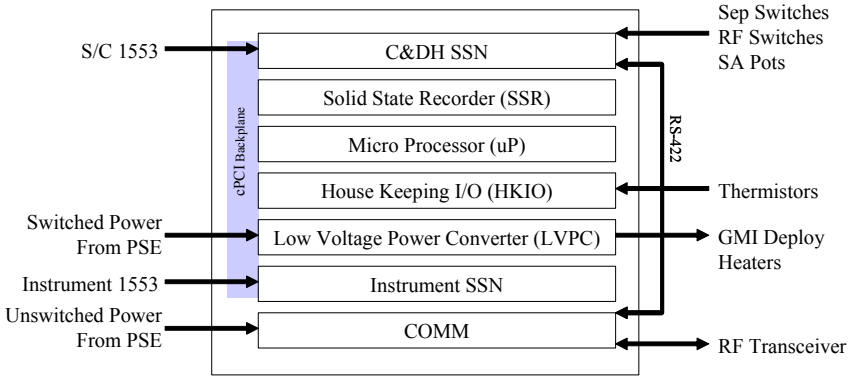

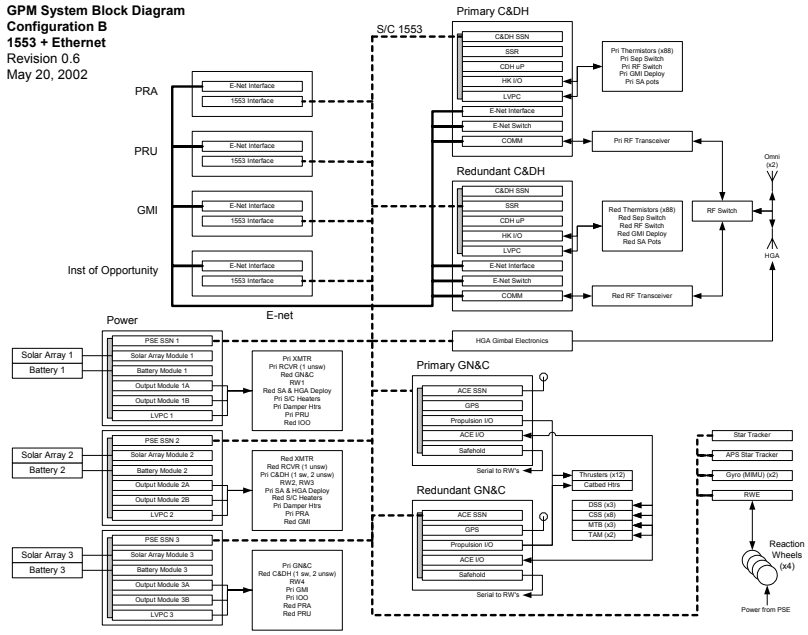

- ***Central Spacecraft C&DH Processor***
  - *All GN&C Activities*
  - *Time Distribution*
  - *Command Processing*
  - *Telemetry Acquisition, Archiving, Frame Generation (IP, UDP)*
  - *Event Message Generation*
  - *Solid State Recorder Recording and Playback (MDP)*
  - *Health and Safety Monitoring*
  - *Memory Management*
  - *Fault Detection and Correction*
- ***HDLC Framing Capability on Comm Card for IP Space-to-Ground Link***
- ***C&DH SSN (Spacecraft 1553 Controller)***
  - *Basic I/O Functions – Sep Switches, RF Switch, Solar Array Pots*
- ***Solid State Recorder (<20 Gb Capacity)***
  - *Instrument Science Data*
  - *Instrument Housekeeping Data*
  - *Spacecraft Housekeeping Data*

Communications Baseline Concept

- ***Driving Requirements***
  - *Communication Networks:*
    - *TDRSS-MA (Primary/Uplink)*
    - *TDRSS-SA, GN (Contingency)*
  - *Uplink Rates*
    - *Omni: 500 bps (emergency), 2 kbps*
    - *HGA: 2 kbps, 16 kbps (operational)*
  - *Downlink Rates (either TDRS or Omnis)*
    - *TDRS-MA: 2 @ 300 kbps (150 each I+Q)*
      - *Two Unique CDMA codes*
      - *Horizontal and Vertical Polarization*
    - *TDRS-SA: 1.4 Mbps (I+Q)*
    - *GN: 2 Mbps (I+Q), 4 Mbps (I+Q)*
  - *Link Margin Requirements*
    - *Minimum 2 db margin through TDRSS*
      - *Effective Bit-Error rate (BER) ~ 10^{-8} (99%)*
    - *Minimum 6 db margin direct to GN*

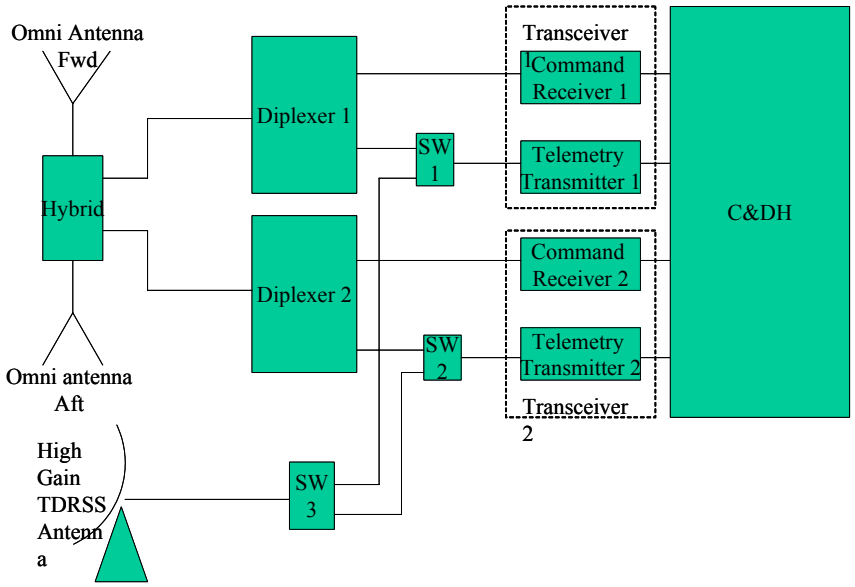

Link	Antenna (Minimum Margin)	Data Rate	Use
MA	HGA (2 db to TDRSS)	Fwd: 2 kbps Rtn: 300 kbps	Normal Operations
SSA	HGA (2 db to TDRSS)	Fwd: 16 kbps Rtn: 1.4 Mbps	Data Recovery
	Omni (6 db GN)	Fwd: 500 bps Rtn: 2 kbps	Contingency
GN	Omni (6 db GN)	Fwd: 2 kbps Rtn: 4 Mbps	Contingency

Flight Software Concept

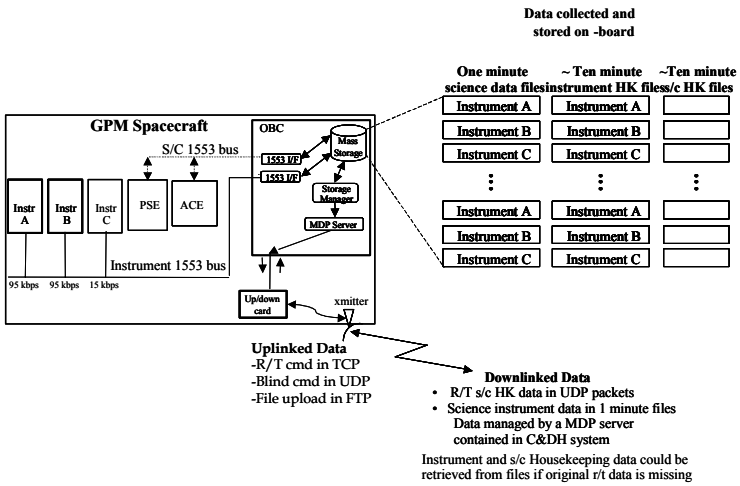

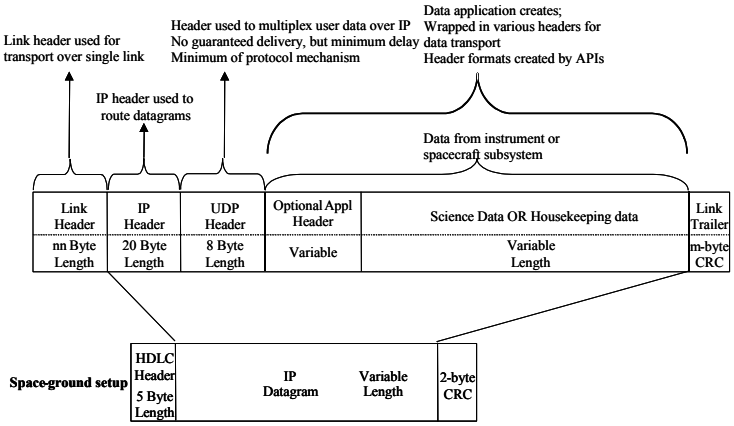

- ***Driving Requirements***
  - *Autonomous Orbit Maintenance*
    - *Algorithms demonstrated on EO-1*
  - *IP Protocols for Space to Ground Link*
  - *Onboard File System Management to provide efficient science data storage & delivery (1 minute files).*
  - *Provide command & housekeeping data ingest & management service over a 1553 bus up to a rate of 300 kbps.*
  - *Provide adequate data storage and monitoring to maintain health & safety of the instruments and s/c subsystems (GNC, PSE, Thermal)*
  - *Provide time management and distribution to synchronize instruments to < 0.1 ms*
  - *Provide Geo-Location information to DPR and GMI instruments.*
  - *Provide steerable HGA pointing*

Technical Risk Areas

- ***Launch Vehicle Mass Allocation***
  - *Sufficient Margins to Accomplish Mission (Both Launch Vehicle and Observatory)*
- ***"Design for Demise" Philosophy/Impacts***
  - *Floating Baseline of Requirements – "What will be the 2014 standards?"*
    - *Final Acceptance of ORSAT Analyses Prior to CDR*
  - *Design/Qualification of New Propellant Tank, Reaction Wheels, Structures*
- ***Mission Fuel Allocation and Impact to Life***
  - *Variability of Schatten Solar Flux Predicts on Size and Date of Hump*
    - *Design Reference Mission Choices Envelope Current Estimates with 20% Margin*
- ***Technology Development/Utilization***
  - *Ultra-Flex Solar Array Utilization in LEO Environment*
    - *LEO Cycling Demonstration Planned for Fall 2002*
  - *Lithium Ion Battery Utilization in LEO Environment*
    - *LEO Cycling Demonstration Underway for Summer 2002 completion*
  - *TDRSS-MA Implementation: RFI Interference with Two CDMA Feeds*
    - *Demonstration Being Investigated for Fall 2002*
  - *"IP-in-Space" Implementation*

Post SRR Trades/Activities

- ***Launch Vehicle Accommodation Study***
  - *Observatory-Wide Mass Allocation Reductions to meet new Launch Allocation*
- ***Instrument Accommodation Studies***
  - *Instrument-of-Opportunity Accommodation Study (June 2002)*
  - *GMI Accommodation Study (IMAL Activities - June 2002)*
  - *DPR Accommodation Study (June-July 2002)*
- ***Integration and Test Philosophy/Flow Development***
  - *Order of Environmental Testing (i.e. Thermal Vacuum before Vibration)*
  - *Facility Availability/Scheduling with SDO Program*
- ***Intra-Subsystem Design Trades***
  - *Design Commonality with SDO Program Requirements*
  - *Mechanical*
    - *Composite vs. Aluminum Structure*
  - *GN&C/Propulsion*
    - *Autonomous Orbit Maintenance*
    - *Bi-Propellant vs Monopropellant System, Propellant Tank Design, Thruster Location*
  - *Power*
    - *Power Distribution/ Load Balancing (#PSE's, Services)*
  - *C&DH*
    - *Ethernet Instrument Data Bus*

Challenges

- ***Launch Vehicle Mass Allocation***
  - *Sufficient Margins to Accomplish Mission (Both Launch Vehicle and Observatory)*
- ***"Design for Demise" Philosophy/Impacts***
  - *Floating Baseline of Requirements – "What will be the 2014 standards?"*
    - *Final Acceptance of ORSAT Analyses Prior to CDR*
  - *Design/Qualification of New Propellant Tank, Reaction Wheels, Structures*
- ***Technology Development/Utilization***
  - *Ultra-Flex Solar Array Utilization in LEO Environment*
    - *LEO Cycling Demonstration Planned for Fall 2002*
  - *Lithium Ion Battery Utilization in LEO Environment*
    - *LEO Cycling Demonstration Underway for Summer 2002 completion*
  - *TDRSS-MA Implementation: RFI Interference with Two CDMA Feeds*
    - *Demonstration Being Investigated for Fall 2002*
  - *"IP-in-Space" Implementation*

Supplemental Charts

Electrical Block Diagram (1553 Data Bus)

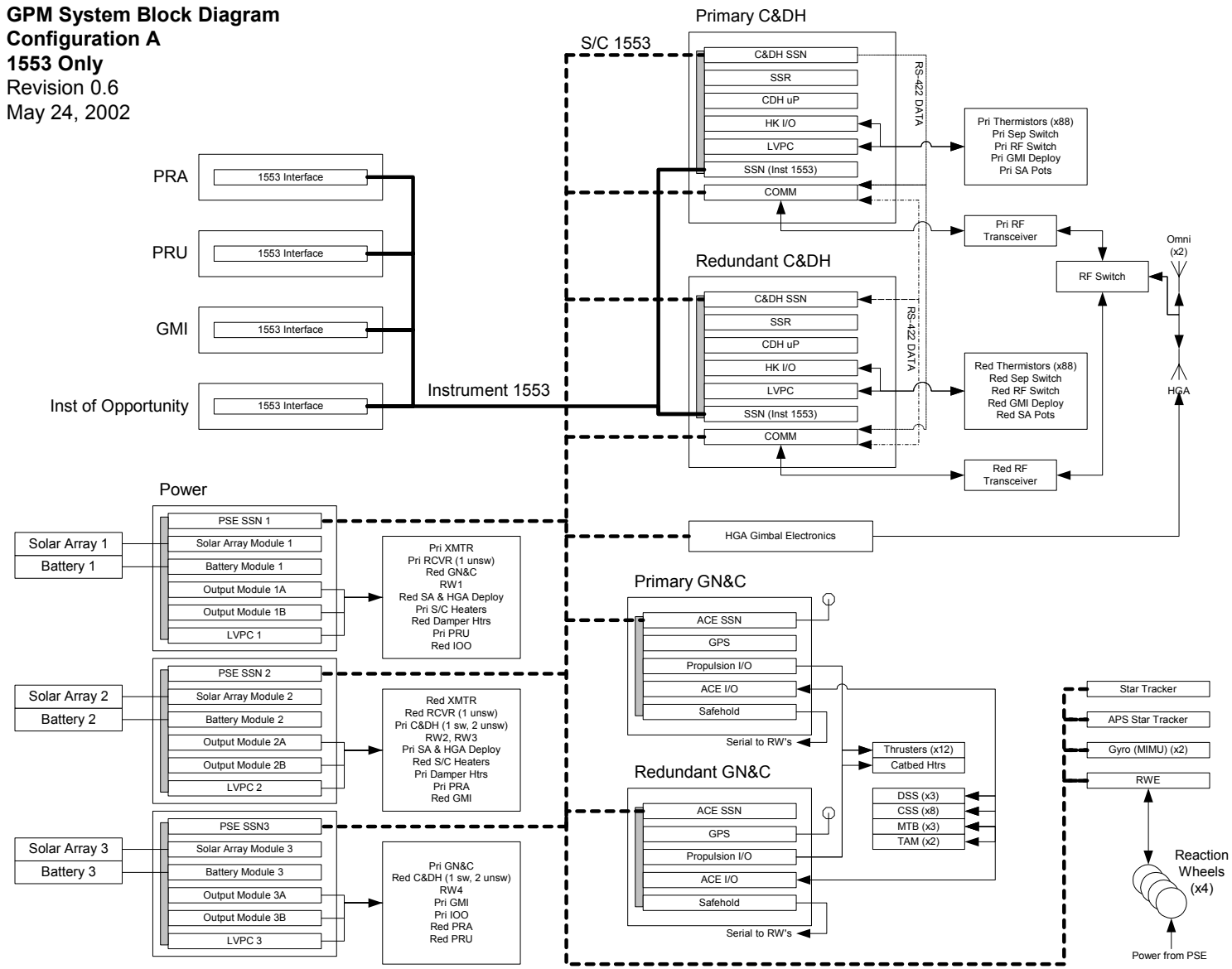

Data Rate Budget

Stream	Allocation (kbps)	Estimate (kbps)	Estimate + IP Overhead (kbps)	On-Board File Size (kb/file)	NRT MDP Transmit Time (sec/file)	Retransmit Time (sec/file)	Estimate + IP + Reed Solomon OH (kbps)
Total	240	239.72	251.48	15044.7	59.25	471.75	288.69
Science	230	225.39	235.74	14144.4	59.25	442.50	270.62
PR-U	95	93.49	97.79	5867.2	24.50	183.50	112.26
PR-A	95	93.49	97.79	5867.2	24.50	183.50	112.26
GMI	15	14.34	14.99	899.6	3.75	28.25	17.21
IOO	25	24.06	25.17	1510.4	6.50	47.25	28.90
Housekeeping	10	14.34	15.74	900.4	RT	29.25	18.06
Bus	10	10.24	10.52	642.6	RT	20.25	12.08
PR-U	0	1.02	1.30	64.4	RT	2.25	1.50
PR-A	0	1.02	1.30	64.4	RT	2.25	1.50
GMI	0	1.02	1.30	64.4	RT	2.25	1.50
IOO	0	1.02	1.30	64.4	RT	2.25	1.50

Stream ID	Allocated Rate	Percent MA Capacity
Real-Time UDP Streams	16 kbps	5.3%
NRT MDP Streams	240 kbps	80.0%
Stored/ Retransmit Streams	32 kbps	10.7%
Margin	12 kbps	4.0%
Total	300 kbps	100.0%

GPM Orbit Period	92.5	minutes
TDRSS Planned Handover Loss	6.5	minutes
TDRSS-MA Coverage	86.0	minutes
Retransmit Handover	56.0	minutes
Retransmit MDP Packets	1.3	minutes
Available for Contingency Use	28.8	minutes
Retransmit Excess Capacity	55200.0	kb
Retransmit Excess Capacity	3.50	minutes

DPR Accommodation vs TRMM PR-U

- ***Mechanical Interfaces***
  - *Similar Kinematic Mounting Configuration as TRMM PR-U*
  - *Radar Cant Angles and Instrument Co-alignment Need to be Investigated*
- ***All Electrical Services for DPR are Scaled from TRMM PR-U***
  - *PR-U: Assume Similar Services Scaled (400/250) from TRMM PR-U*
  - *PR-A: Assume Similar Services Scaled (250W/313W) From PR-U*
- ***Electrical Services***
  - *TRMM was fully Redundant and Cross-strapped Power Bus (4 Feeds)*
  - *GPM baseline is Redundant Services from Single Power Bus (2 Feeds)*
- ***Thermal Design***
  - *TRMM had Inertial Safe-Hold Mode which drove survival heater Services*
    - *Orbital Average 245W (490W peak)*
  - *GPM baselines Nadir-Pointing Safe-Hold (Orbital Average 93W)*
- ***Data Interface***
  - *GPM baseline is 1553 Data Interface versus TRMM's 1773 Data bus*